SHEPHERD
MICRO RACING TEAM

VELOX 8.3

NAME	Alex Esser
DATE	11/28-12/6
EVENT	Ifmar world championship
TRACK	CACH
AIR TEMP	75
TRACTION	Medium
BEST LAP	18.6

CASTER 5 mm

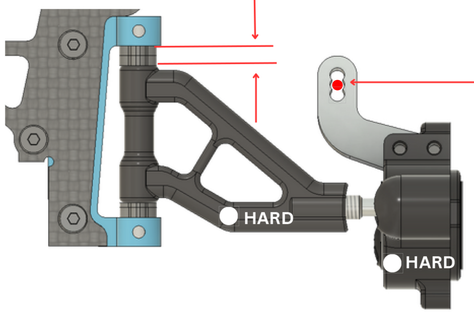

UPRIGHT INSERTS: CENTRIC ○ EXCENTRIC ✔

BUMP STEER 2 mm

FRONT ONEWAY POSITION

	HIGH ✔		
BELT	210mm	210mm	207mm
FRONT — REAR			
BELT	210mm	210mm	207mm
		LOW	

ACTIVE ○ SHIM ___ mm

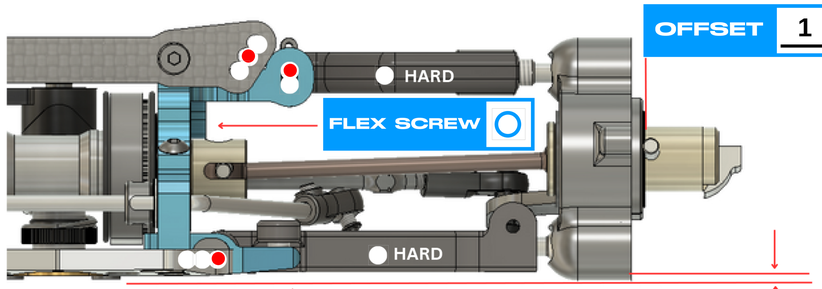

FLEX SCREW ○

OFFSET 1 mm

RIDE HEIGHT 9 mm

DOWNSTOP + 1 mm

WHEELBASE: LONG ✔ SHORT ○

TOE IN/OUT 2 °

CAMBER LEFT 2 °

WIDTH 257 mm

CAMBER RIGHT 2 °

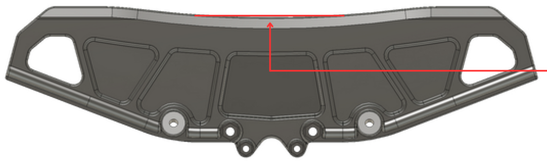

BODY: Super Diablo

DISTANCE TO BUMPER 18 mm

AWS BATTERY TRAY ○

CARBON ○ BRASS ○ | CARBON ○ BRASS ✔ | CARBON ○ BRASS ○

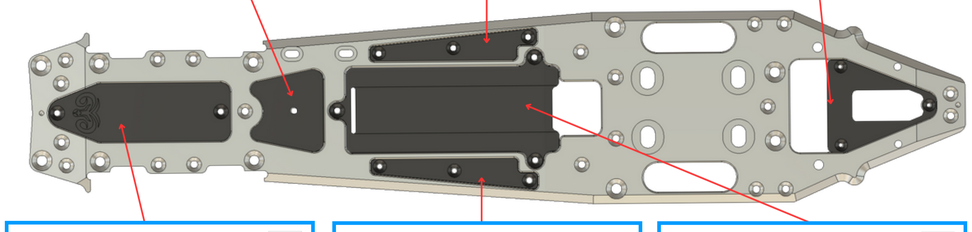

CARBON ✔ BRASS ○ | CARBON ○ BRASS ✔ | CARBON ✔ BRASS ○

FRONT / REAR

FRONT LEFT	FRONT RIGHT		REAR LEFT	REAR RIGHT
Matrix	Matrix	BRAND	Matrix	Matrix
32	32	SHORE	35	35
68	68	DIAMETER	75	75
		ADDITIVE		

SHOCKS

Kit	SPRINGS	Kit
650	OIL	500
Kit	PISTON	Kit
1	HOLE	2
Kit	FP SPRING	Kit

ANTI-ROLL BAR

FRONT 2.6 mm REAR 2.4 mm

FRONT AXLE

SOLID ○ SPLIT ● 90 DEG ○ STR ○

CLUTCH

TYPE	Shepherd
SHOE	Yellow
PRELOAD	1.2
GAP	0.55

GEAR RATIO

1ST 19 / 61 2ND 24 / 57

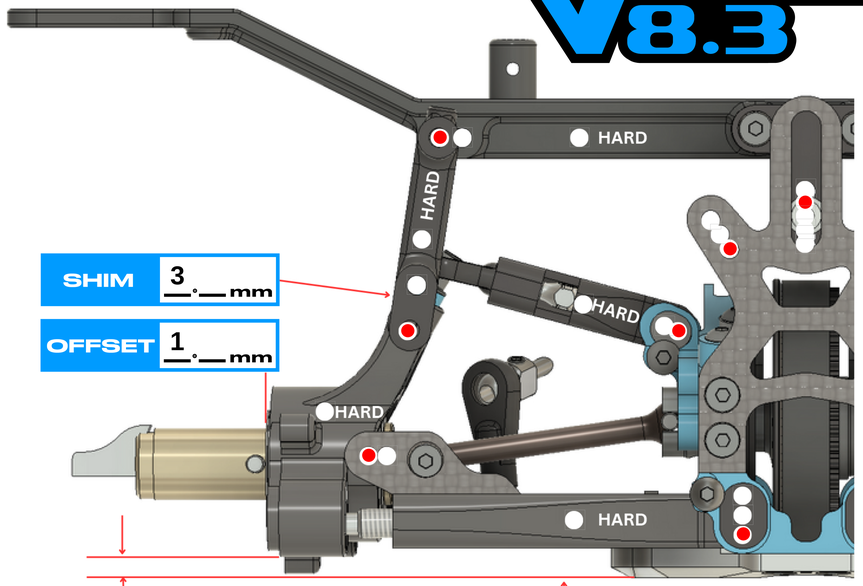

SHIM 3 mm

OFFSET 1 mm

DOWNSTOP 8 mm

RIDE HEIGHT 10 mm

CAMBER LEFT 3.5°

TOE IN/OUT 4 °

CAMBER RIGHT 3.5°

WIDTH 264 mm

LONG ○ MEDIUM ✔ SHORT ○

8mm ○ 9mm ○ 10mm ●

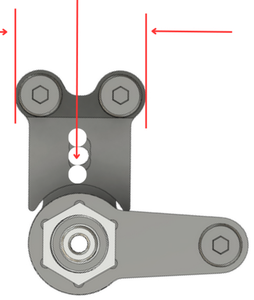

UPRIGHT INSERTS: F ○ R ○

AERO DISCS: F ○ R ✔

ENGINE	Max power 351R	PIPE	Max power 2183		
MANIFOLD	Max 02199	GLOWPLUG	O.S	FUEL	25%

NOTES

Brilliant titanium hinge pins
Brilliant titanium screws
LHO carbon body mount
Low friction pulleys
Low friction belts
Carbon bumper stiffner